tX-USB hub





Precaution

Please read this instruction carefully before use.

- Do not attempt to disassemble or modify the product.
- Keep the product away from the external shocks or vibrations.
- Do not use the damaged or peeled cables.
- Do not use the unit outdoors.
- Product specifications and features are subject to change without notice.

Supplied components

- tX-USBhubEX Unit
- Operating instruction

Specification

- USB host interface port
  - USB 2.0 Type B connector
- USB output Port
  - Type A USB 2.0 connector x 2
  - USB port power on/off switch x 2
- USB interface chip set
  - USB 2.0 Compliant HUB controller
  - HS(480 Mbps), FS(12 Mbps), LS(1.5 Mbps) support
- Power input
  - Input voltage : +6.5V ~ +9Vdc
  - Input current : 2A max
  - 5.5mm OD, 2.1mm ID adaptor jack

- USB port output power
  - Output voltage : +5.0V(+0.5V, -0.25V)
  - Over current protect : 0.8A at 20°C
  - Recommend output current : 0.5A >
- Operating environment
  - Operating temperature : +10 ~ +30℃
  - Storage temperature : 0 ~ +40℃
  - Operating & storage humidity : 10% ~ 90%

Product Outline

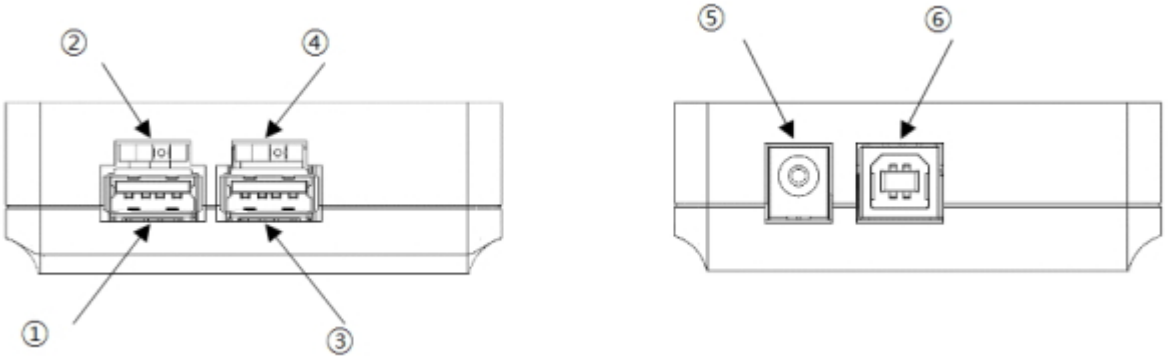

1. USB output port no. 1 : Connect to USB audio device.
2. Power switch of USB output port no. 1 : Switch ON, if the connected USB audio device requires USB power. If not, switch OFF.
3. USB output port no. 2 : Connect to USB audio device.
4. Power switch of USB output port no.2 : Switch ON, if the connected USB audio device requires USB power. If not, switch OFF.
5. Power input jack : The power, 6.5Vdc ~ 9Vdc, 2A, is required to operate the unit. (jack size : 5.5mm OD, 2.1mm ID) A supplied 9V/2A adopter, mBPS-d2s or sPS-1000 can be used.
6. USB input port : Connect to an USB port of your PC or server by USB cable (Type A - to - Type B).

Recommend using one of USB ports only. If you use both USB ports at the same time, sound quality may degrade.

Product user guide

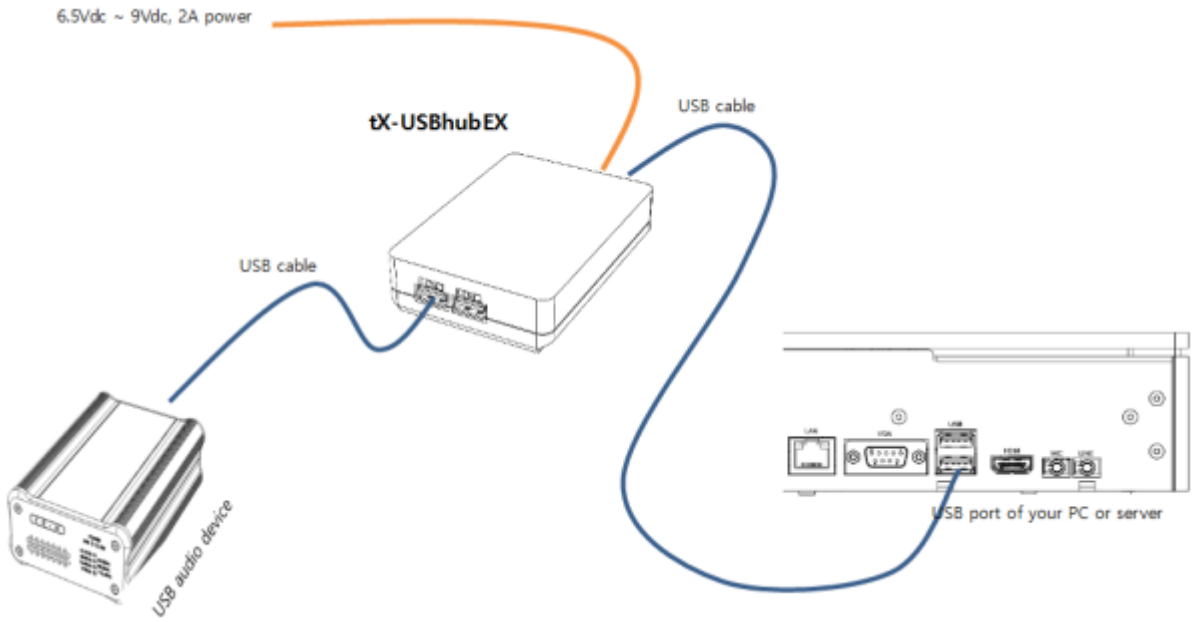

- tX-USBhubEX is 2 ports USB2.0 external hub designed for the best USB audio performance.
- Put the unit on a proper place, and connect to an USB port of PC or server by USB cable (Type A - to - Type B)
- Connect the supplied 9Vdc, 2A power wall adopter, mBPS-d2s or sPS-1000 power supply to the power input jack to operate the unit.
- And then the green LED of the unit will be lit on and automatically recognized as a USB hub without additional driver installation.
- If the connected USB audio device requires +5V, switch ON the power switch, if not, switch OFF.
- Connect one of USB output ports to USB Audio device by USB cable(Type A - to - Type B)

Warranty Information

Free warranty service

- In case of the defect is found caused by the design or the production flaw while using the device properly, a manufacturer is responsible for the faulty product and the free warranty service for 1 year from the date of purchasing.
- Even in the warranty service period, malfunction or damage of products caused by the inevitable incident such as a natural disaster is not subject of the free warranty service.

Warranty service at a cost

- The product that free warranty service period is expired.
- Malfunction of the product caused by a user’s fault.
- Malfunction of the product caused by incidents.
- Malfunction of the product caused by a natural disaster such as earthquake, flood, lightning & etc.
- In case of the warranty service at a cost, a customer should cover the transportation costs.

Samples of a user’s fault

- In case of attempts to disassemble or modify the device
- In case of not following the instructions on this manual

Please read this operating instructions & Q&A board on our website carefully before asking for the warranty service.

From:
https://docs.sotm-audio.com/ - **SOtM docs**

Permanent link:
https://docs.sotm-audio.com/doku.php?id=en:tx-usbhub

Last update: **2016/09/08 02:50**